TGM800

Consumables & Spare Parts Reference Card

Note: Part numbers and standards' values may change. Consult LECO for the latest information.

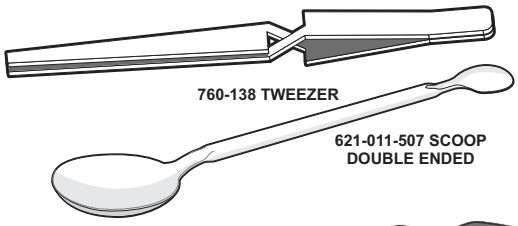

621-010-236
1.51 DIA ALUMINUM
FOIL CRUCIBLE

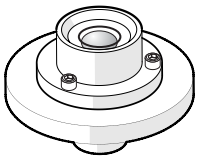

621-011-397
PEDESTAL
LEVEL ASSY.

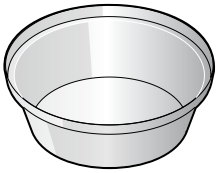

621-010-956
2.40 DIA ALUMINUM
FOIL CRUCIBLE

621-011-237
11 PLACE CAROUSEL

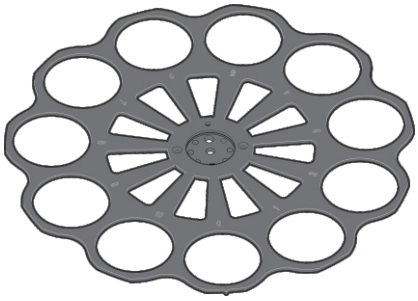

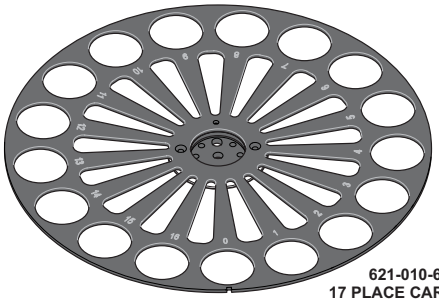

621-010-642
17 PLACE CAROUSEL

621-010-609-110
BALANCE

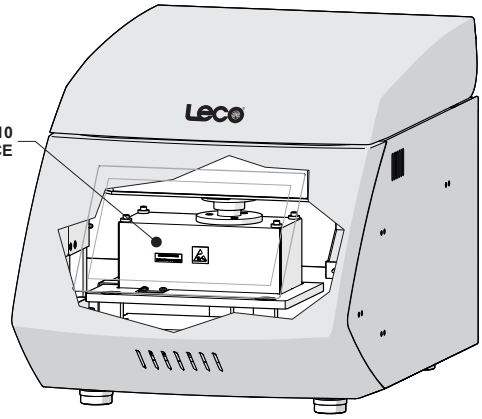

900-141
TEFLON TUBING
COVER

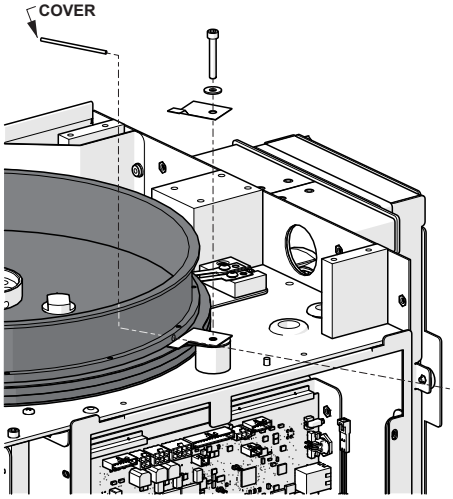

621-011-113
THERMOCOUPLE

621-010-340
CRUCIBLE PEDESTAL

621-011-228
PEDESTAL BALANCE

621-011-251
PEDESTAL SHIELD

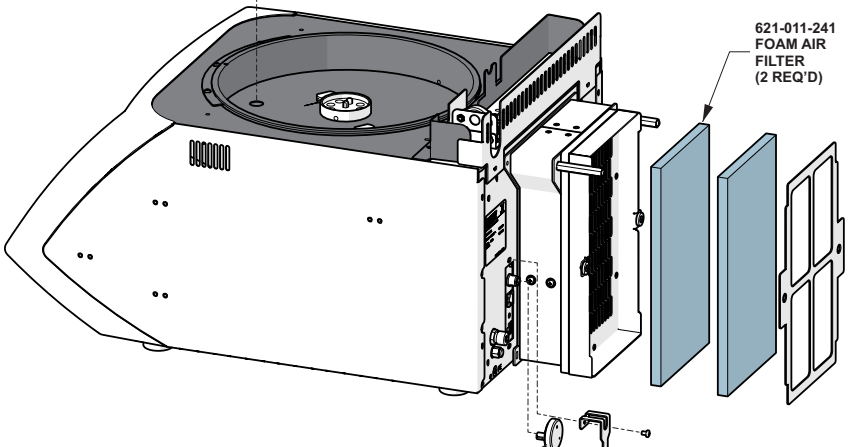

621-011-241
FOAM AIR
FILTER
(2 REQ'D)

621-010-899
AMBIENT MONITOR
ASSEMBLY

621-011-422
RETAINING
BRACKET

LECO is a registered trademark of LECO Corporation

OPTIONAL ACCESSORIES

621-011-553	Weight Calibration 50 g
619-995	Scanner Bar Code Laser USB
619-593-570	Scanner Bar Code Laser Bluetooth
621-011-560	Kit Oven Temp Verification
621-011-574	Kit Extension Exhaust TGM

CRUCIBLES AND SPARE PARTS

502-237	Wipes Foam 25/pk
621-011-240	Filter Air Foam 6.00 x 11.00 x 1.00 25 ppi
621-011-241	Filter Air Foam 6.00 x 11.00 x 1.00 10 ppi
621-011-103	Filter Air Foam 6.00 x 11.00 x 1.00 45 ppi
621-010-609-110	Assy Balance Complete TGM Tested
621-010-236	Crucible Foil Alum 1.51 dia 1000/pk
621-010-956	Crucible Foil Alum 2.40 dia 1000/pk

REFERENCE MATERIALS AND STANDARDS

Current part numbers and values for LECO Reference Materials and Standards (209-296) can be found at https://www.leco.com/consumables

United States: 800-292-6141 • Canada: 800-268-0215 • Other Countries: 269-985-5496
info@leco.com • www.leco.com • ISO-9001:2015 Certified • © 2024 LECO Corporation

LECO
EMPOWERING RESULTS

 LECO is a registered trademark of LECO Corporation